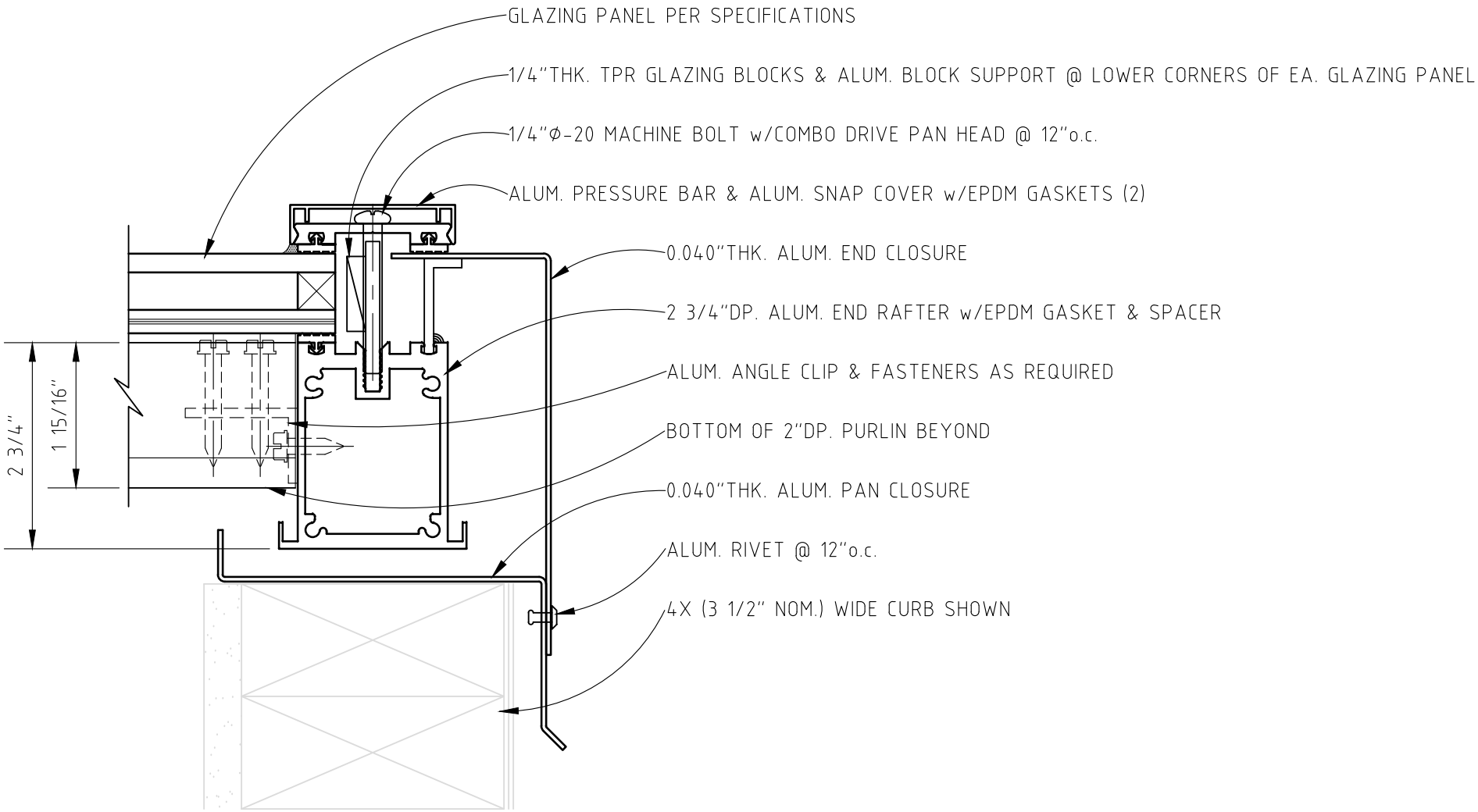

SKYCO SKYLIGHTS 949-629-4090	"D-1" END RAFTER DETAIL	HALF SCALE	DRAWING #: SKC-028