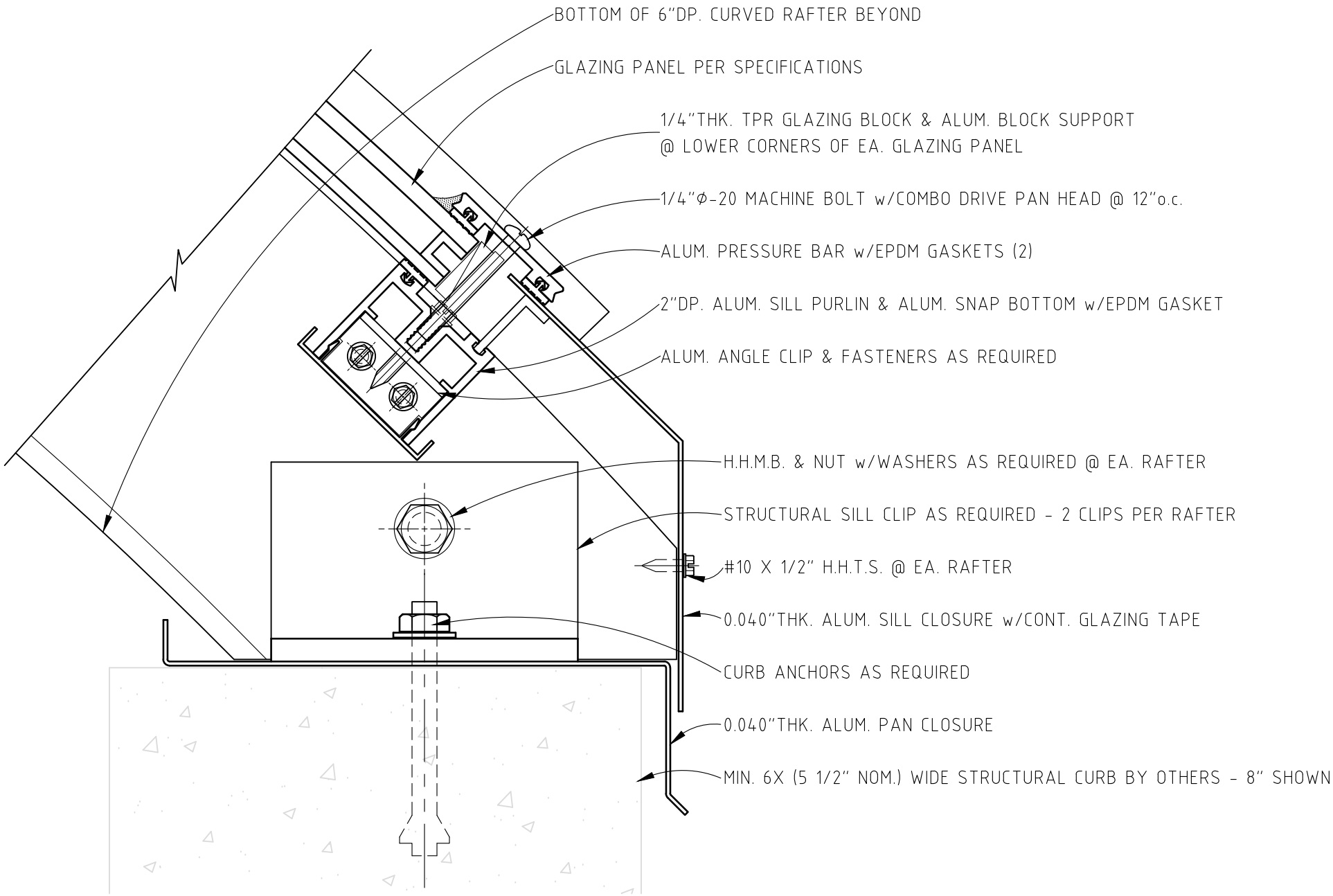

SKYCO SKYLIGHTS 949-629-4090	"S-5" VAULT SILL DETAIL - L.P.	HALF SCALE	DRAWING #: SKC-078